DIMENSIONAL DRAWING:ET4304L

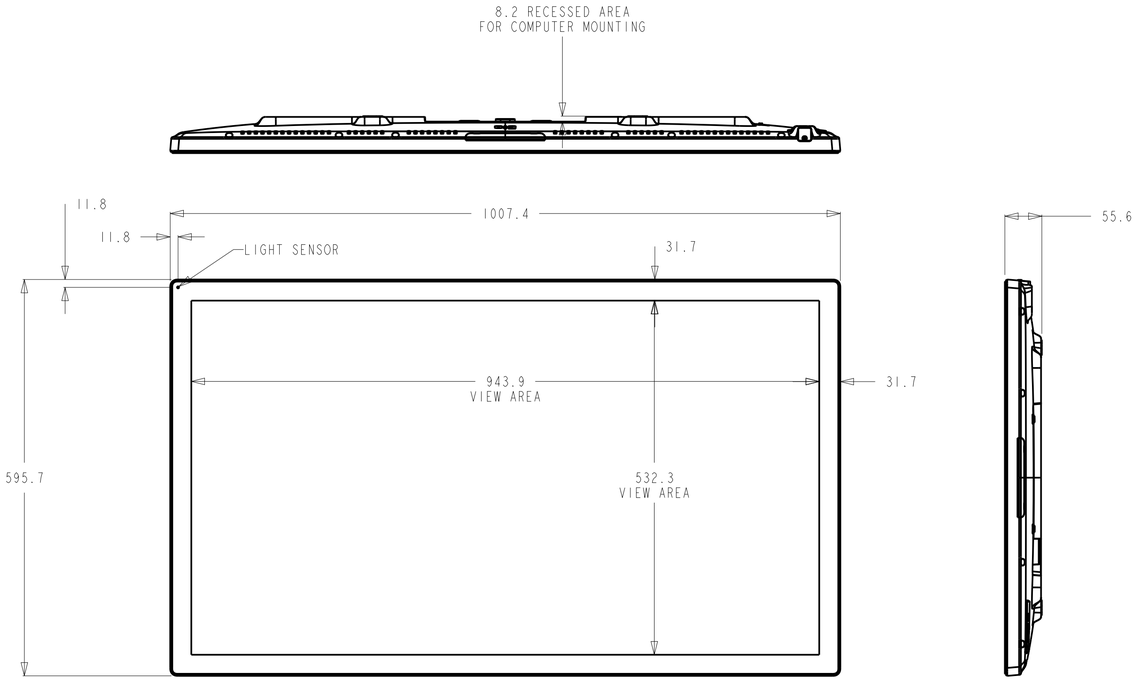

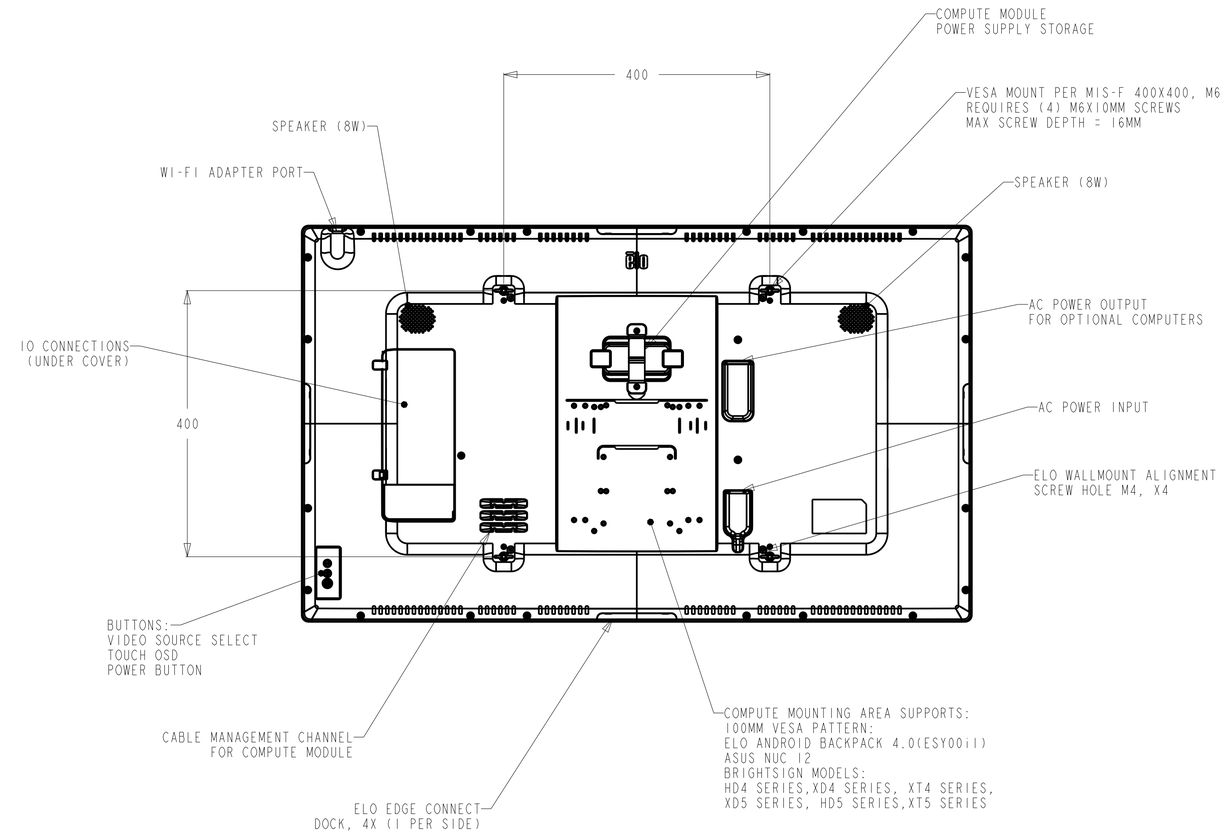

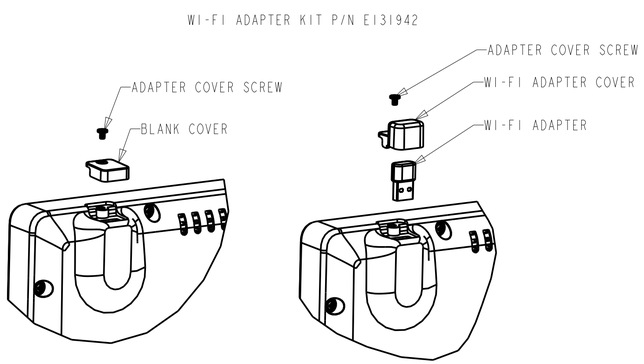

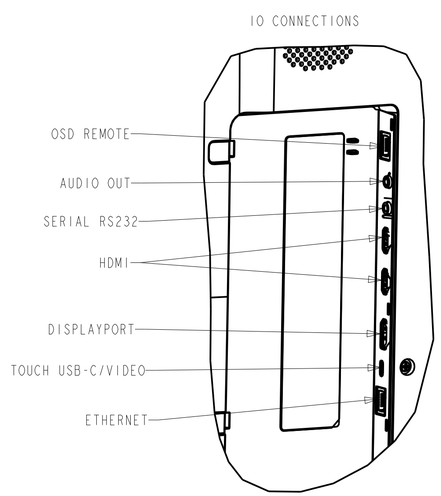

DIMENSIONS ARE IN MILLIMETERS

SHEET 1 OF 2

elo

MS603259_A2
DATE:03/18/2024
REV: A2

COMPUTE MODULE MOUNTING

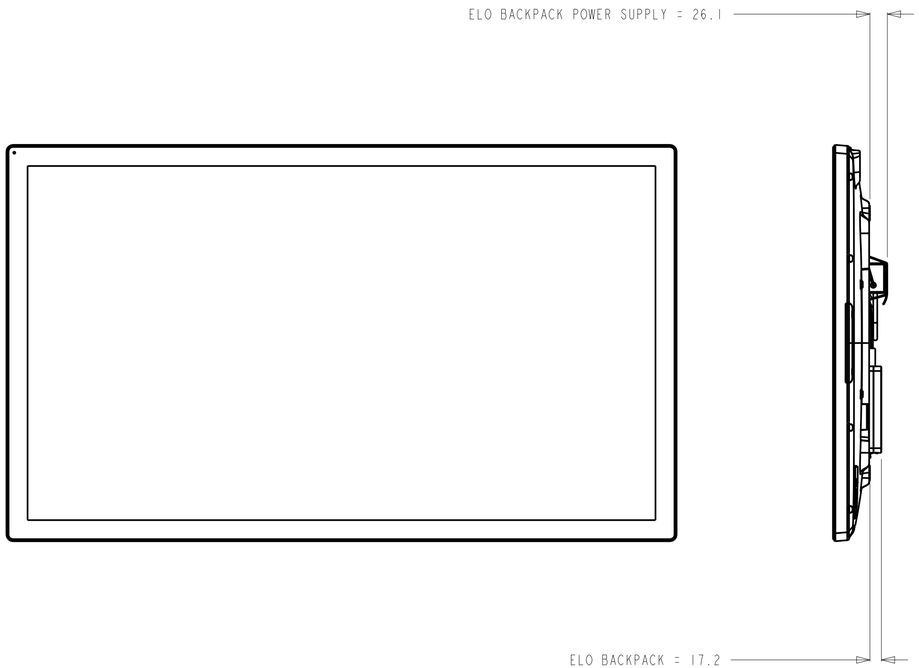

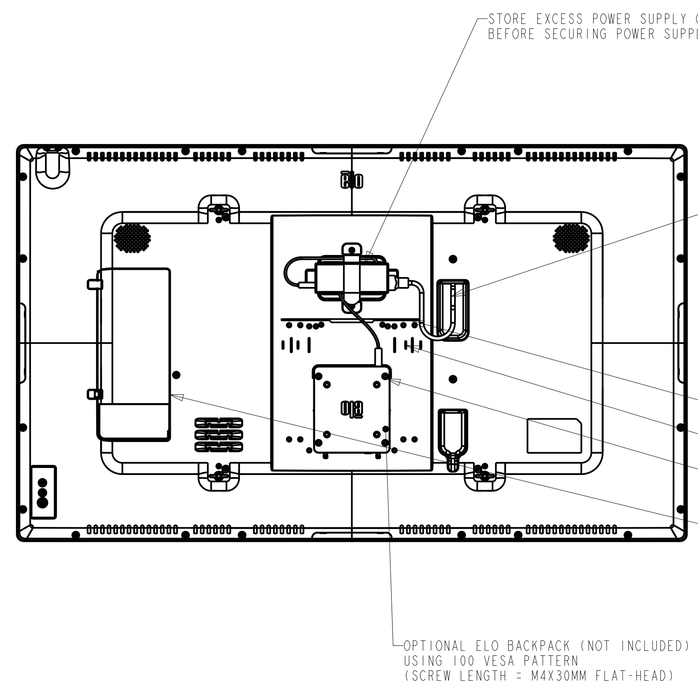

BRIGHTSIGN COMPUTE MODULE MOUNTING INSTRUCTIONS:

1. ALIGN COMPUTE MODULE EDGE WITH HORIZONTAL MARKING
2. CENTER COMPUTE MODULE USING VERTICAL MARKS
3. INSTALL M4 SCREWS THROUGH DEVICE (MAX SCREW DEPTH = 5MM)
4. CONNECT POWER AND IO CABLES FROM COMPUTER TO 4304L

DIMENSIONS ARE IN MILLIMETERS

elo

MS603259_A2
DATE:03/18/2024
REV: A2